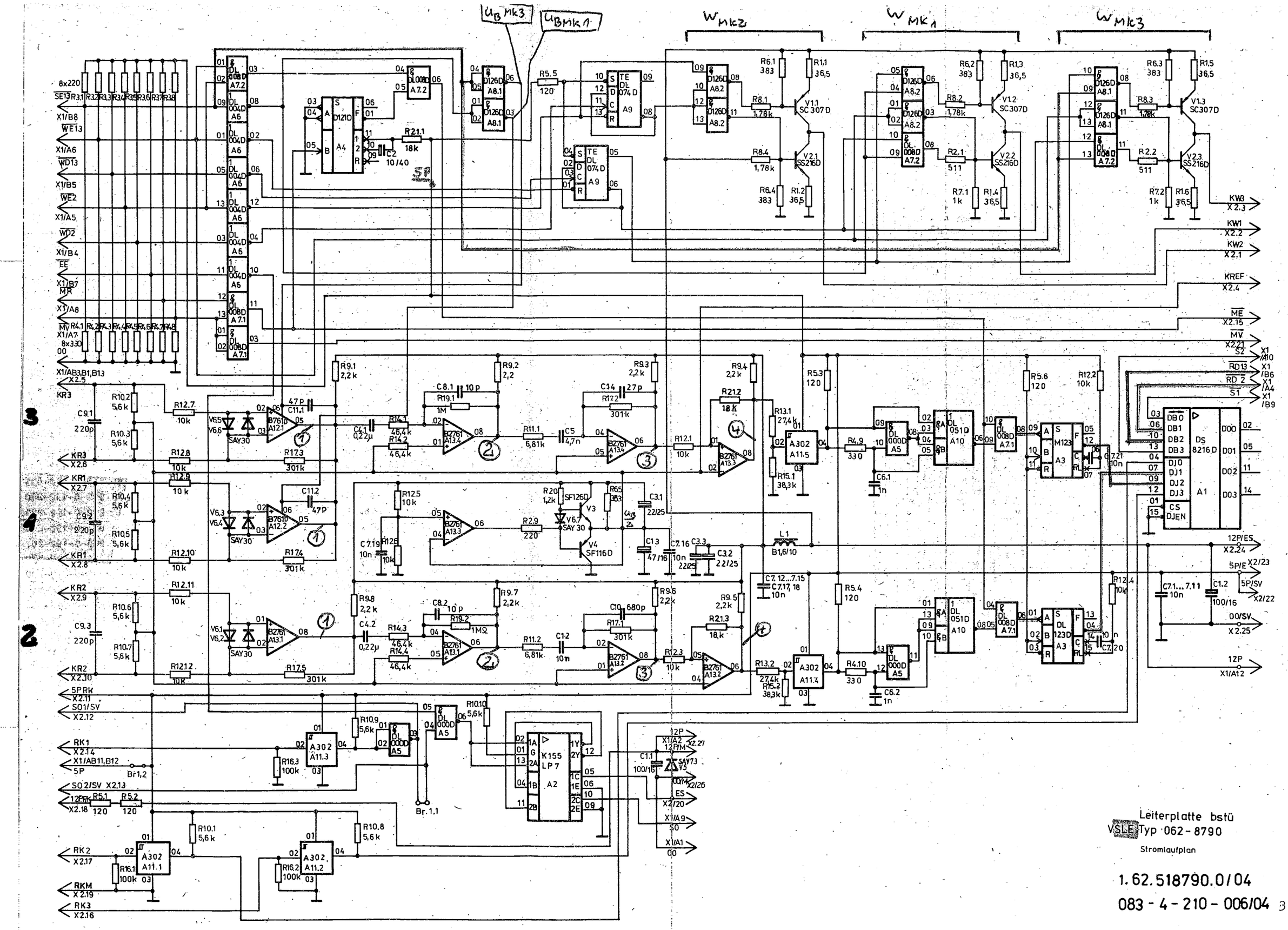
UBMK3
UBMK1
WMK2
WMK1
WMK3
KW3 X2.3
KW1 X2.2
KW2 X2.1
KREF X2.4
ME X2.15
MV X2.21
S2
RD13
RD 2
S1
12P/ES X2.24
5P/E X2/23
5P/SV X2/22
00/SV X2.25
12P X1/A12
DS 8216.D
A1
CS DJEN
DB0 DB1 DB2 DB3
DJ0 DJ1 DJ2 DJ3
DO0 DO1 DO2 DO3
K155 LP7 A2
A302 A11.1
A302 A11.2
A302 A11.3
A302 A11.4
A302 A11.5
Br 1,2
Br. 1.1
Leiterplatte bstü
VSLE Typ 062-8790
Stromlaufplan
1.62.518790.0/04
083-4-210-006/04 3